Stk: Pz: Pcs:	ART. 2220	WASSERHAHN - RUBINETTO - WATER TAP	Kunde-Cliente-Client	Datum-Data-Date

Edelstahl - Wasserhahn mit Absperrventil, Schlauchanschluss und Perlator (TYP A)
Rubinetto in **acc. inox** con valvola a leva, attacco tubo e perlatore (TYP A)
Water tap in **stainless steel** with lever valve, tube connection and perlator (TYP A)

(ca.) Ø =_____cm

a =_____cm

a'=_____cm

TYP ☐

3050 ☐

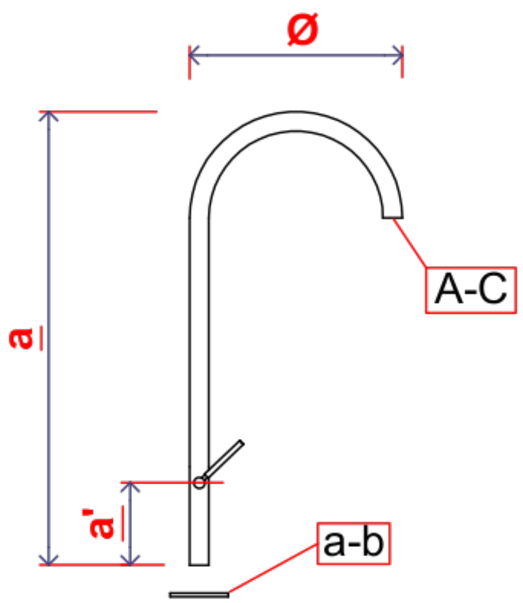

Empfohlen - Consigliate - Recommended

Ø24cm	a46cm	a'12cm
Ø30cm	a52cm	a'12cm
Ø36cm	a56cm	a'12cm
Ø42cm	a60cm	a'12cm

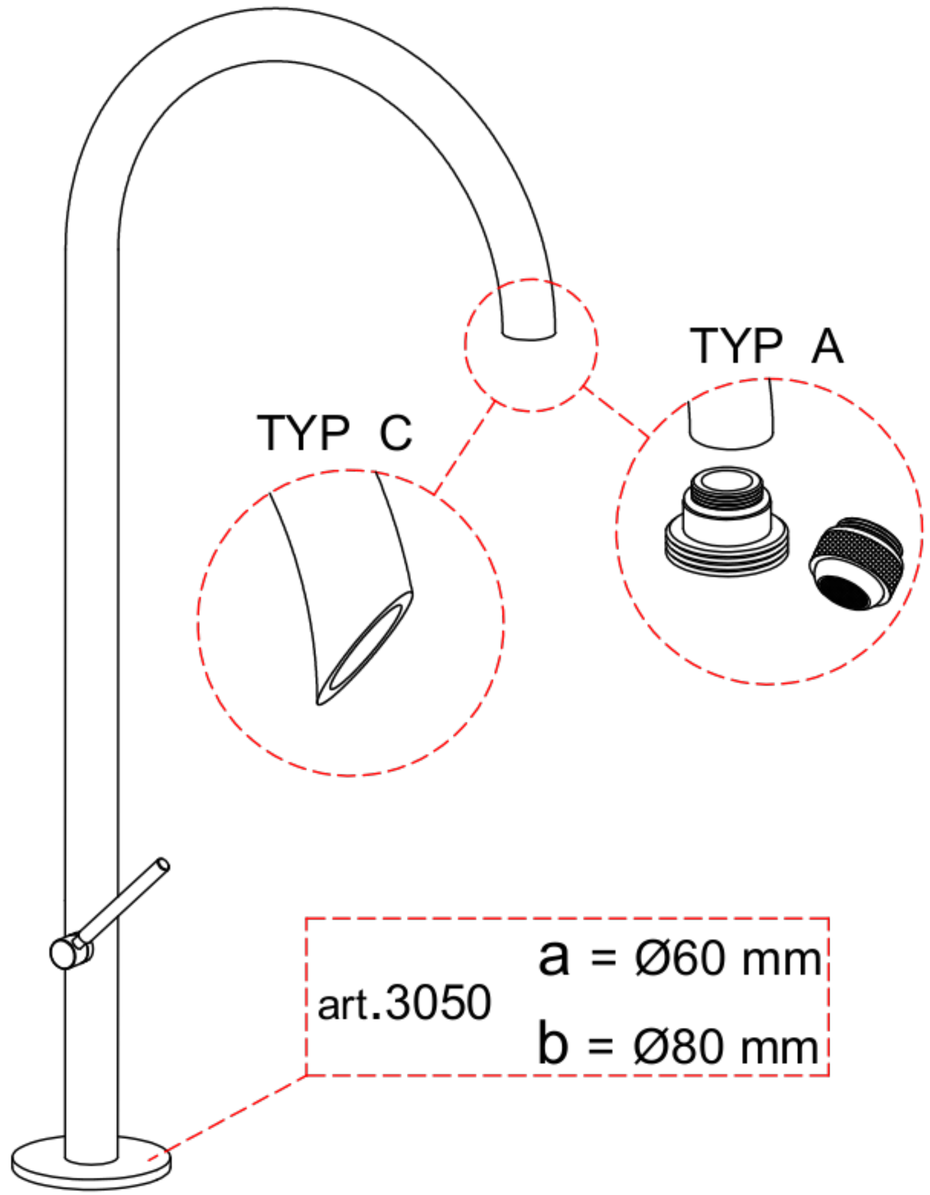

1/2" Innengewinde - Filetto interno - Inner Thread

Ø 33 mm Rohr - Tubo - Tube

Position
Posizione
Position

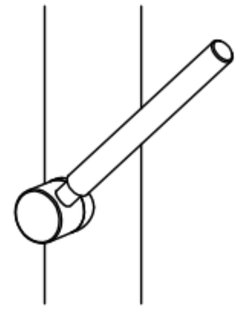
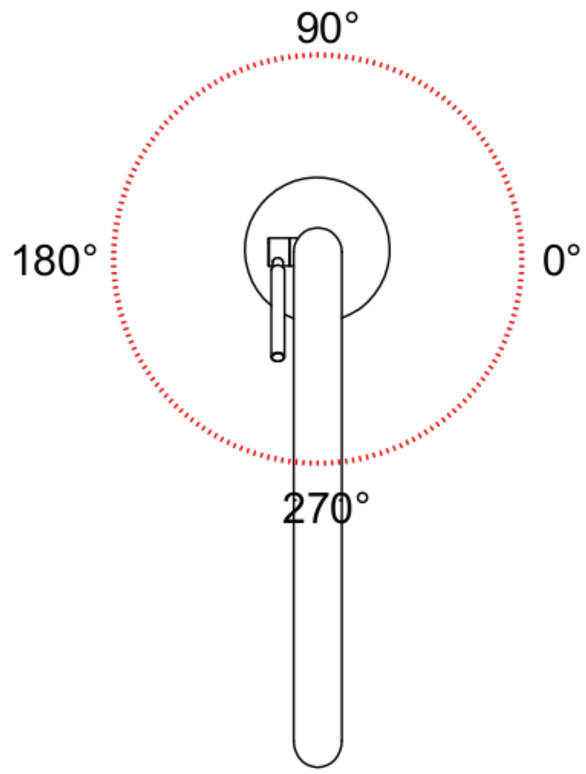
0° ☐ 90° ☐ 180° ☐ 270° ☐